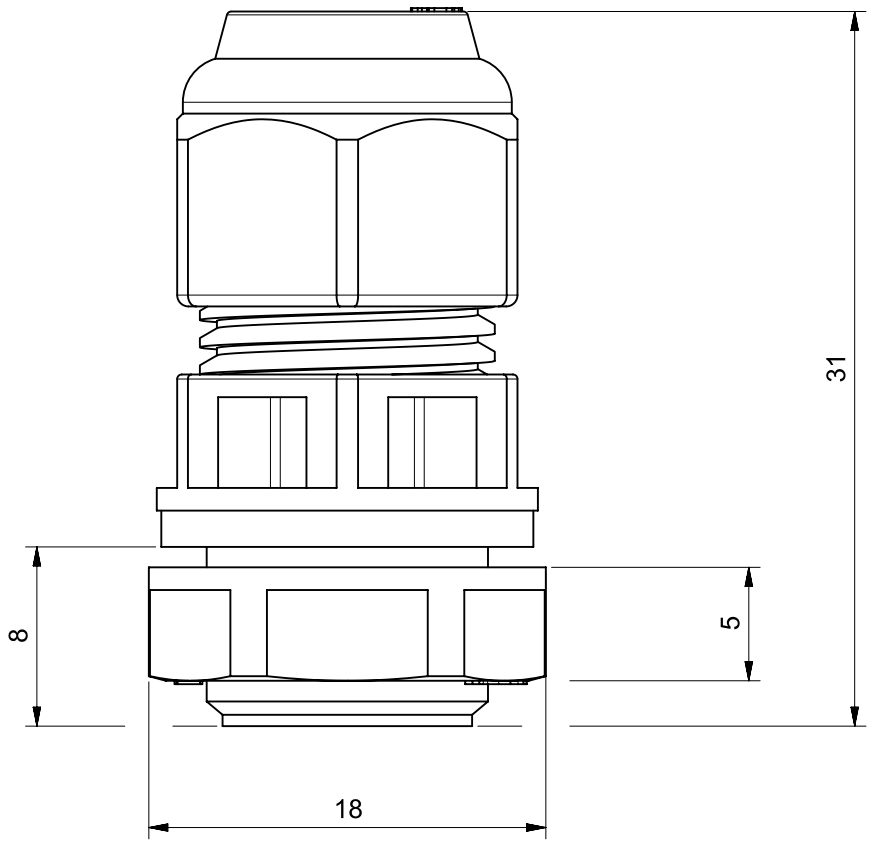

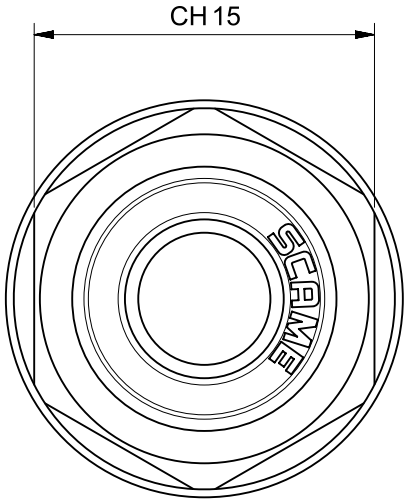

Under the terms of the law we reserve the ownership of this design may not be copied and transfer it to third parties or competitors	Format	A4V	Scale	2:1	Mould N°		Drawn	SCAME
	Tolerances for linear and angular dimensions without indication of specific tolerances: JS13 / UNI 286-1:2010						Date	
							Approved	
SCAME PARRE S.p.A.	DESCRIPTION						CODE	Sheet 1 / 1
	PRESSACAVO PG 7						4013116	