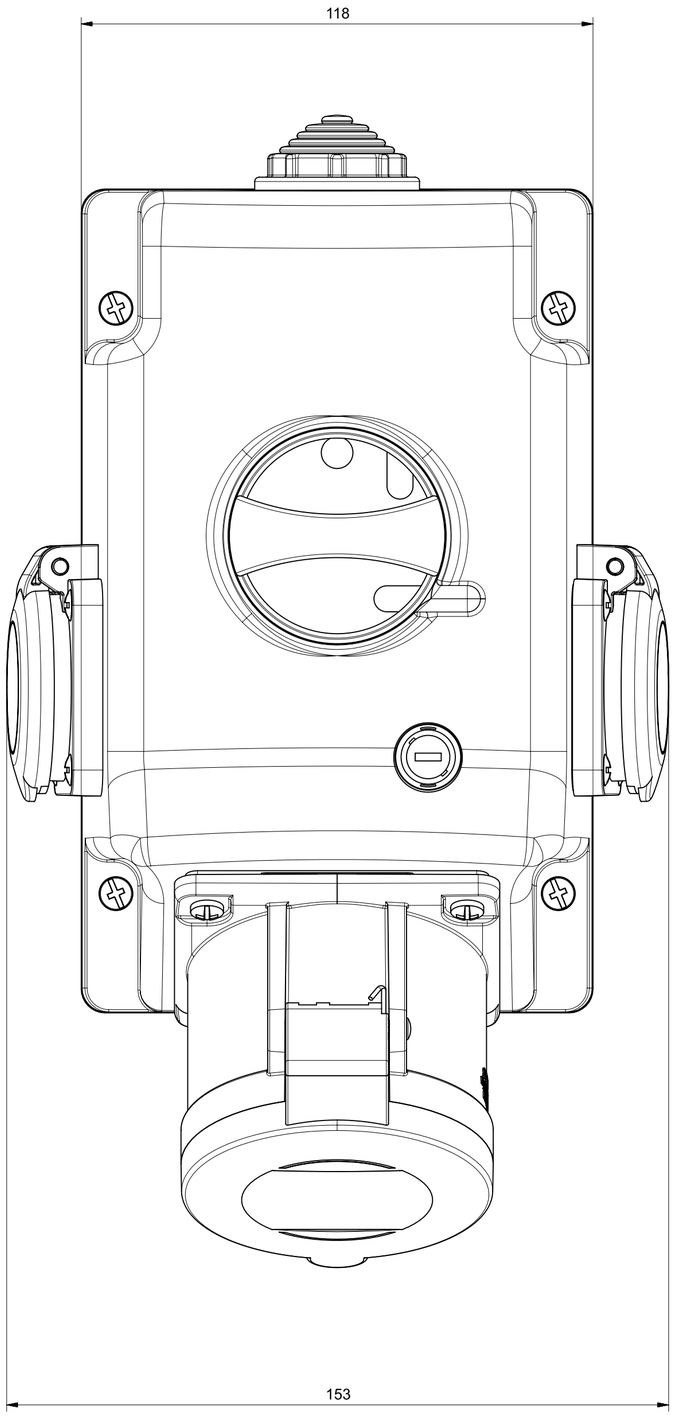

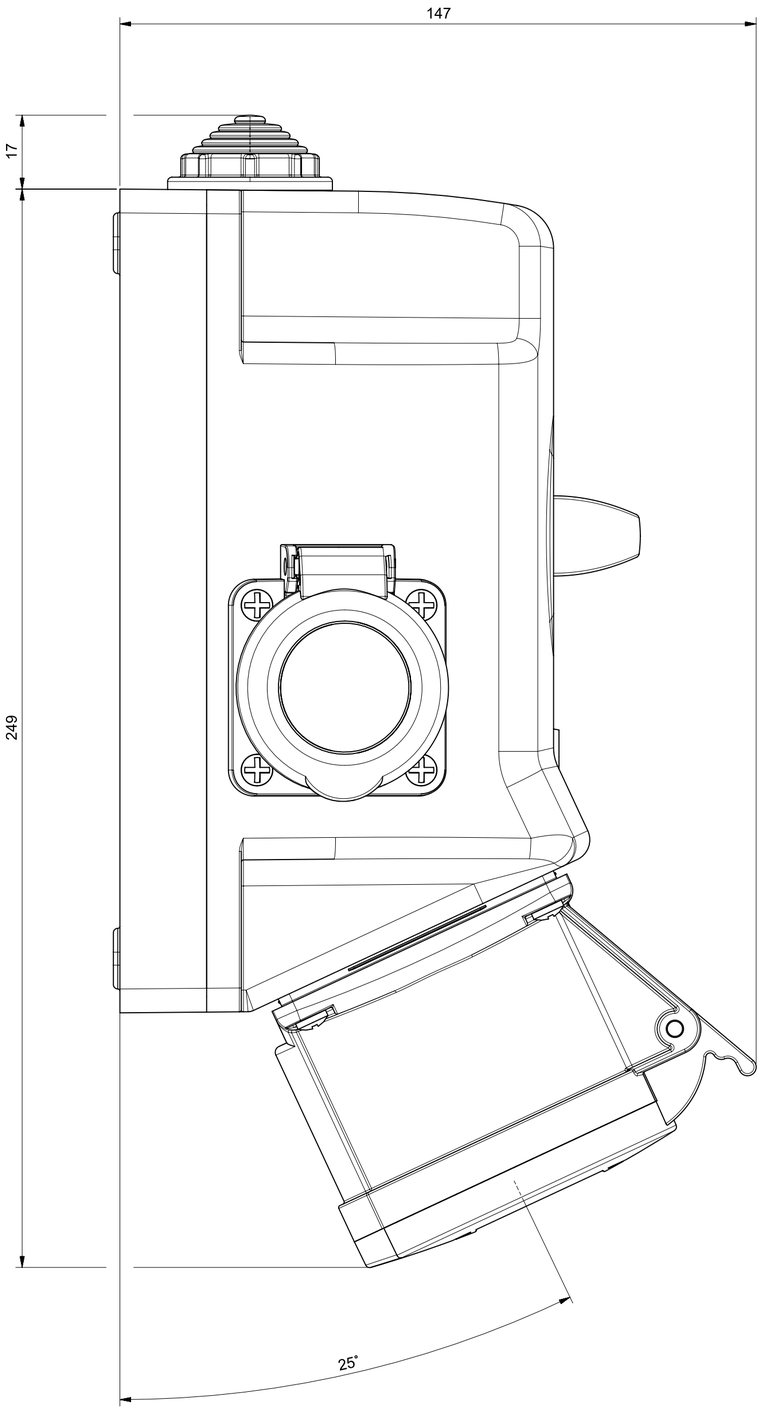

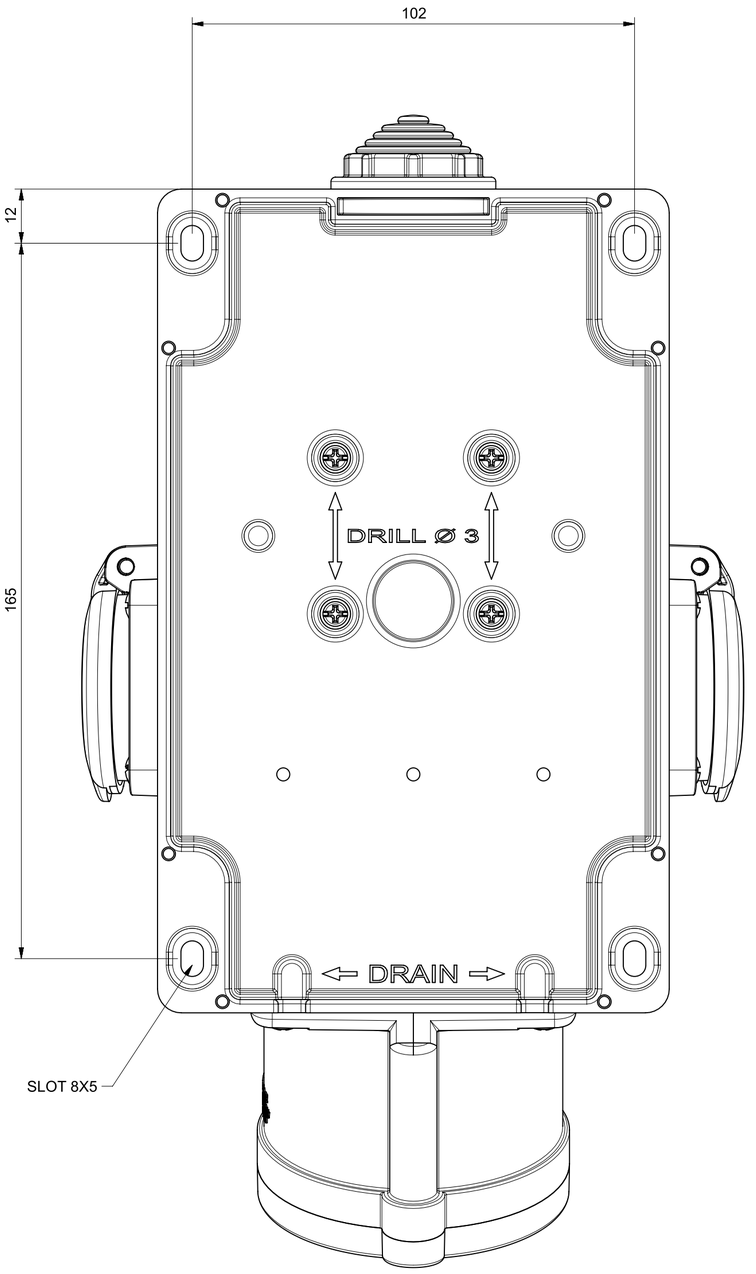

At the end of the law, we reserve the ownership of this design may not be copied and transfer it to third parties or competitors

Format	A2	Scale	1:1	Mould N°		Drawn	SCAME
Tolerances for linear and angular dimensions without indication of specific tolerances: JS13 / UNI 286-1:2010						Date	
						Approved	-

SCAME PARRE S.p.A.

DESCRIPTION

OPTIMA-COMBI 3P+N+T 32 A + 2 PRESE DOMO FRANCESI

CODE 4006921

Sheet 1 / 1