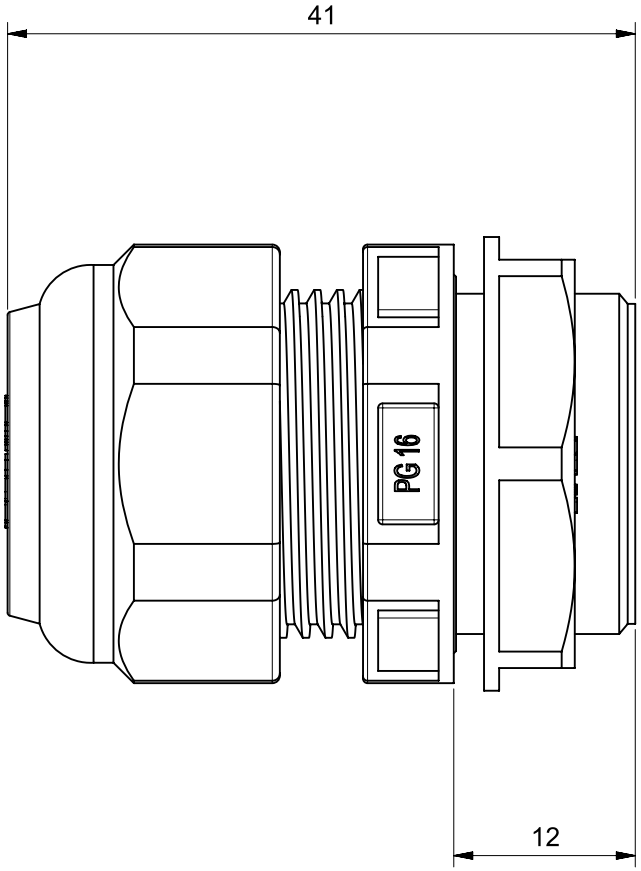

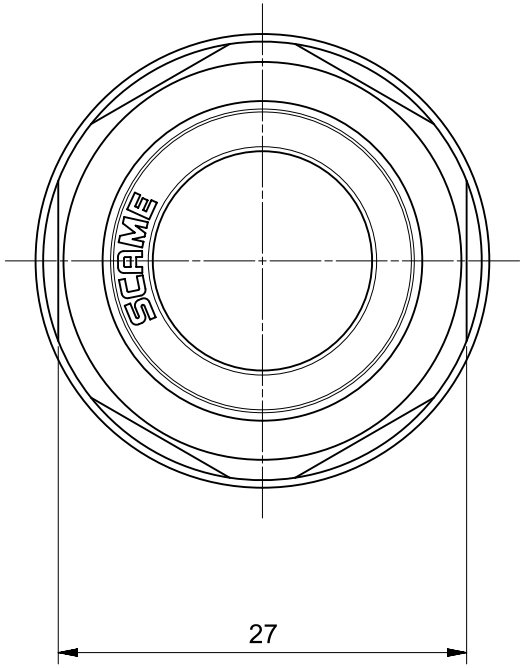

At the end of the law, we reserve the ownership of this design may not be copied and transfer it to third parties or competitors

Format	A4O	Scale	2:1	Mould N°	1000XXXX	Drawn	SCAME
Tolerances for linear and angular dimensions without indication of specific tolerances: JS13 / UNI 286-1:2010						Date	gg-mm-aaaa
						Approved	

SCAME S.p.A.
PARRE - (Bergamo)

DESCRIPTION

PRESSACAVO PG 16 GUARNIZIONE A MEMBRANA

CODE Sheet 1 / 1

4004546