

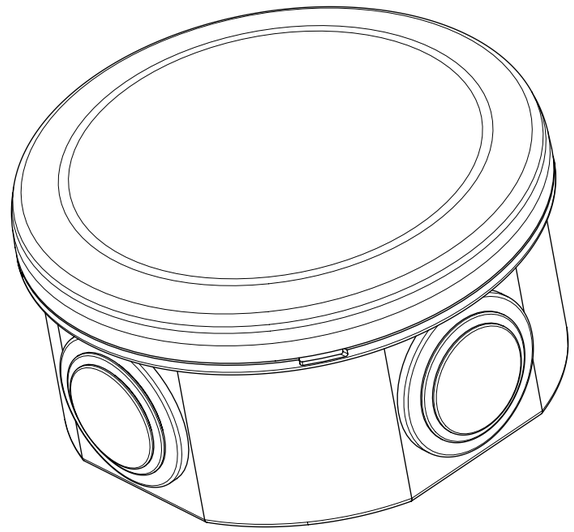

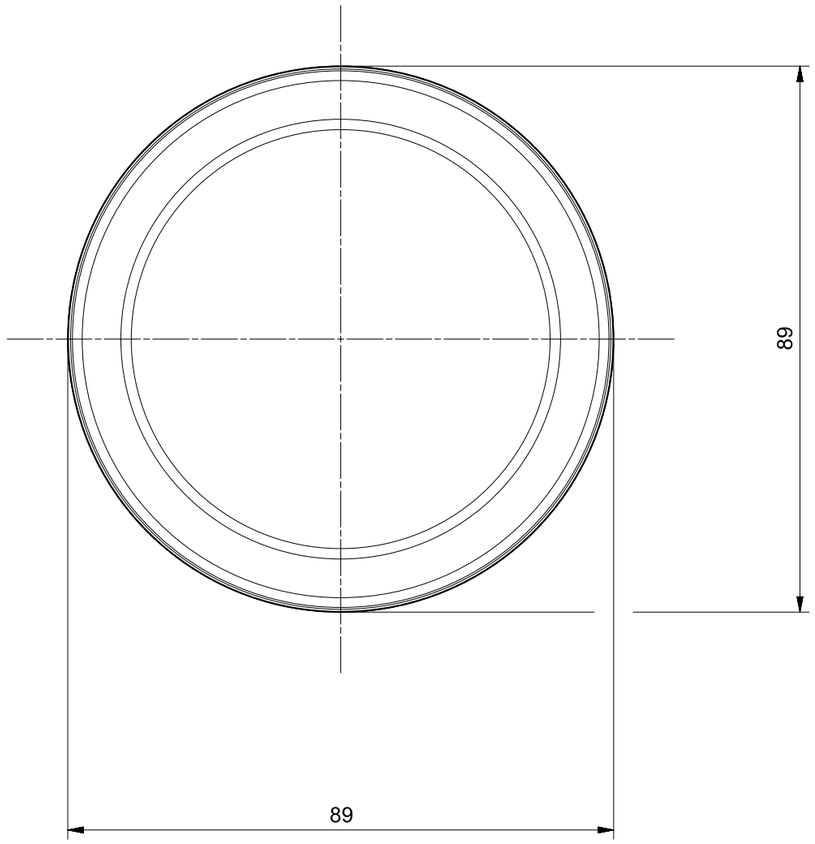

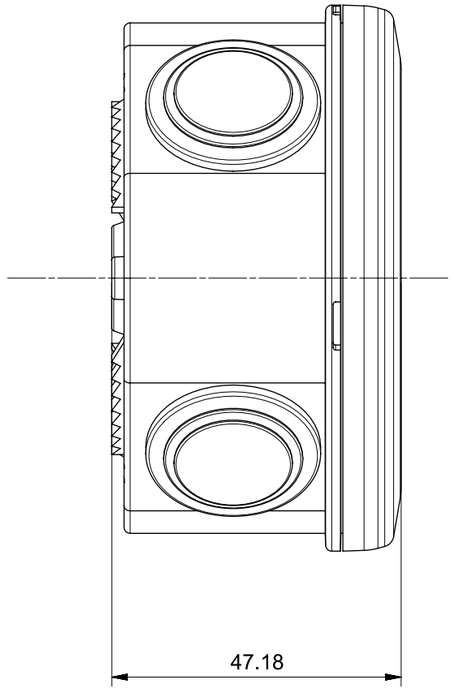

At the end of the law, we reserve the ownership of this design may not be copied and transfer it to third parties or competitors

Format	A3	Scale	1:1	Mould N°		Drawn	SCAME
Tolerances for linear and angular dimensions without indication of specific tolerances: JS13 / UNI EN20286						Date	
						Approved	

SCAME S.p.A.
PARRE - (Bergamo)

DESCRIPTION

SCATOLA DER. D80 C/PAS. CUBIK

CODICE Sheet 1 / 1

4001919