204.WB11L-T2

Plastic wall mounting box with
1 socket Type 2 **shutter** 1P+N+T 16A 230Vac 3,5kW



> REFERENCE STANDARD

EN 61851-1 (2011)
Electric vehicle conductive charging system.
Part 1: General requirement.
EN 61439-1 (2011)
Low-voltage switchgear and control gear assemblies.
Part 1: General requirement.

> TECHNICAL CHARACTERISTICS

Rated current:	**16A**
Rated voltage:	**230Vac**
Frequency:	**50-60Hz**
Insulating voltage:	**250V**
Protection degree:	**IP54**
Operating temperature:	**-25°C +40°C**
Material:	**Engineering plastic**
Glow wire test:	**650°C**
IK degree at 20°C:	**IK08**
Color:	**Grey**
Mounting:	**Wall**
Salt mist:	**Resistant**
UV radiation:	**Resistant**

> FUNCTIONS

- charge in mode 3 with pwm circuit pilot
- identification of connected cord-set size
- energy metering and current consumption
- managing of latching system
- working in mode stand-alone free

> EQUIPMENTS

1 terminal strip 3x6mm²
1 digital energy meter 1P+N 45A
1 contactor 2P 20A 24Vdc
1 fuse holder 1P+N gG 4A
1 power supply 24Vdc 36W
1 control card
1 couple of service led
1 stop charge push-button (mode free)
Excluded:
- upstream protection: 1 breaker 2P D20 30mA ist. A
- emergency line 24Vdc (optional)

> DIMENSIONS

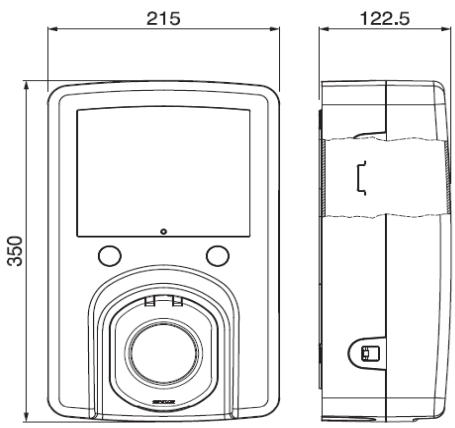

The information included in this document are subject to variations without notice