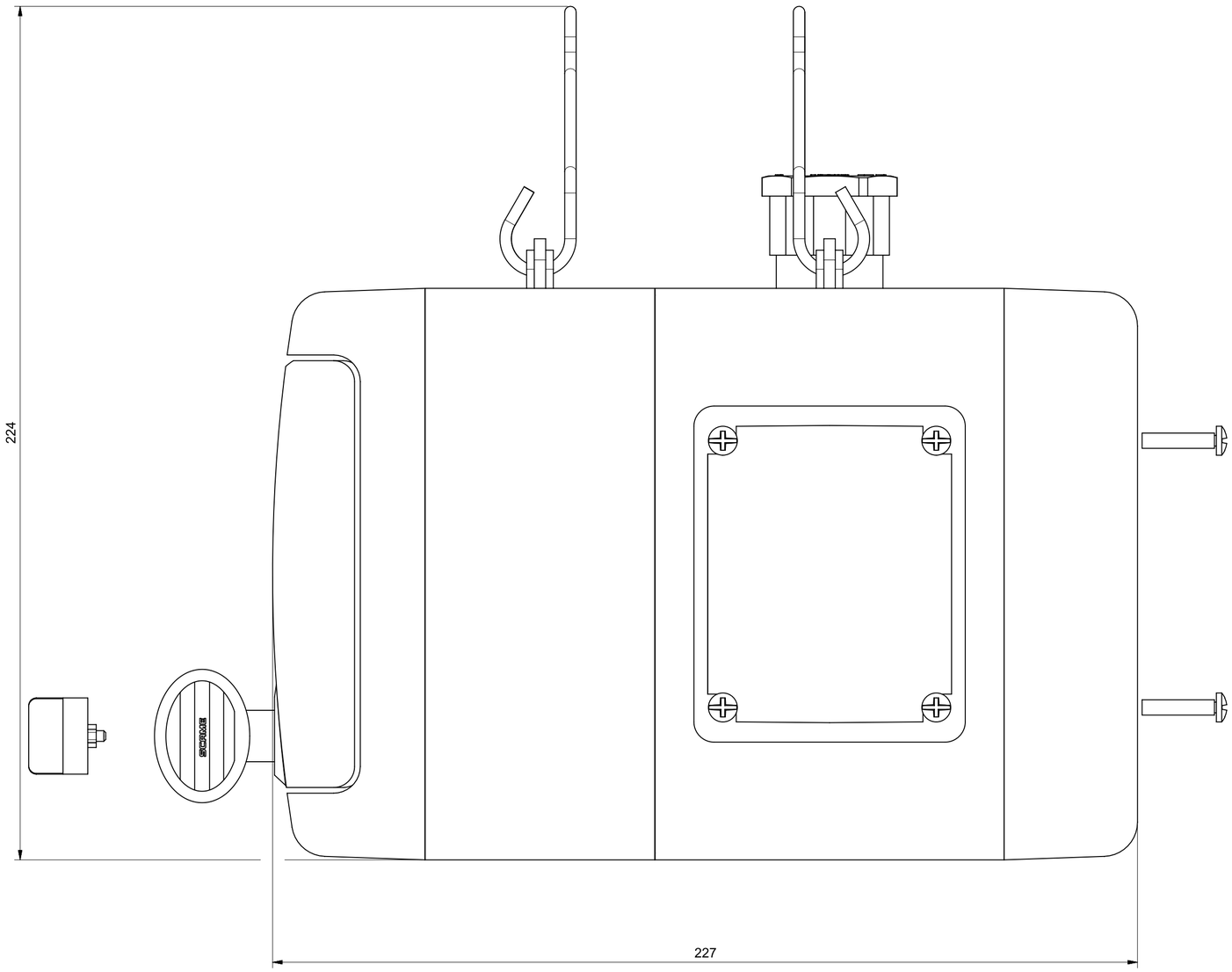

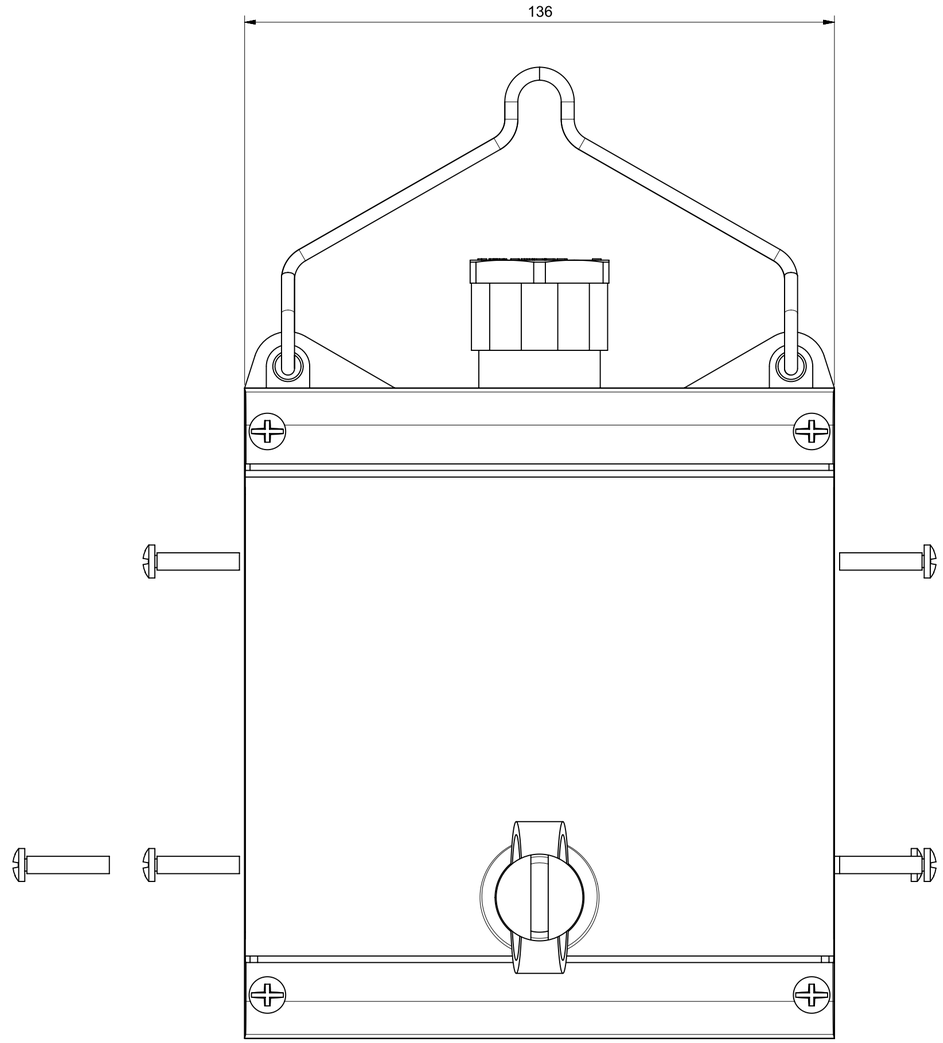

At the end of the law, we reserve the ownership of this design may not be copied and transfer it to third parties or competitors

Format	A2	Scale	1:1	Mould N°	1000XXXX	Drawn	SCAME
Tolerances for linear and angular dimensions without indication of specific tolerances: JS13 / UNI 286-1:2010						Date	gg-mm-aaaa
						Approved	

SCAME S.p.A.
PARRE - (Bergamo)

DESCRIPTION

ADATTATORE VUOTO 3 USCITE CON FORI

CODE 4007383

Sheet 1 / 1