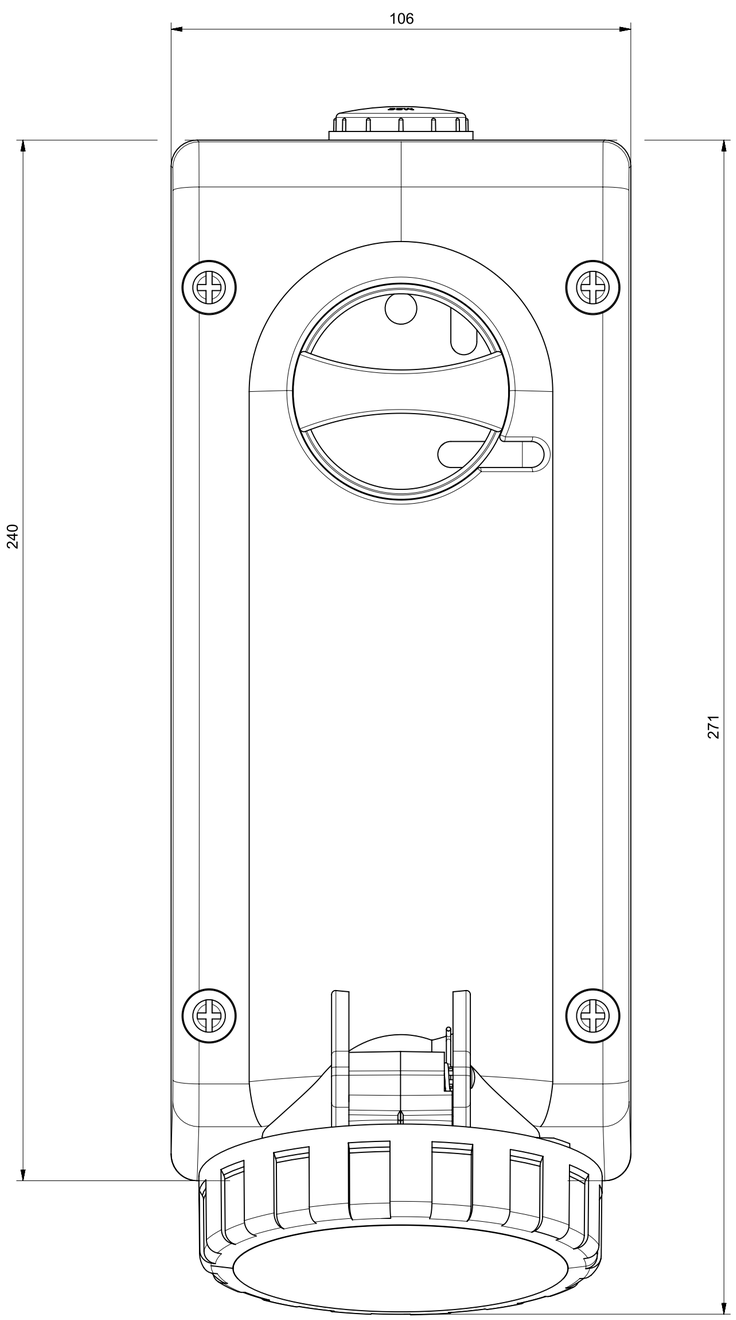

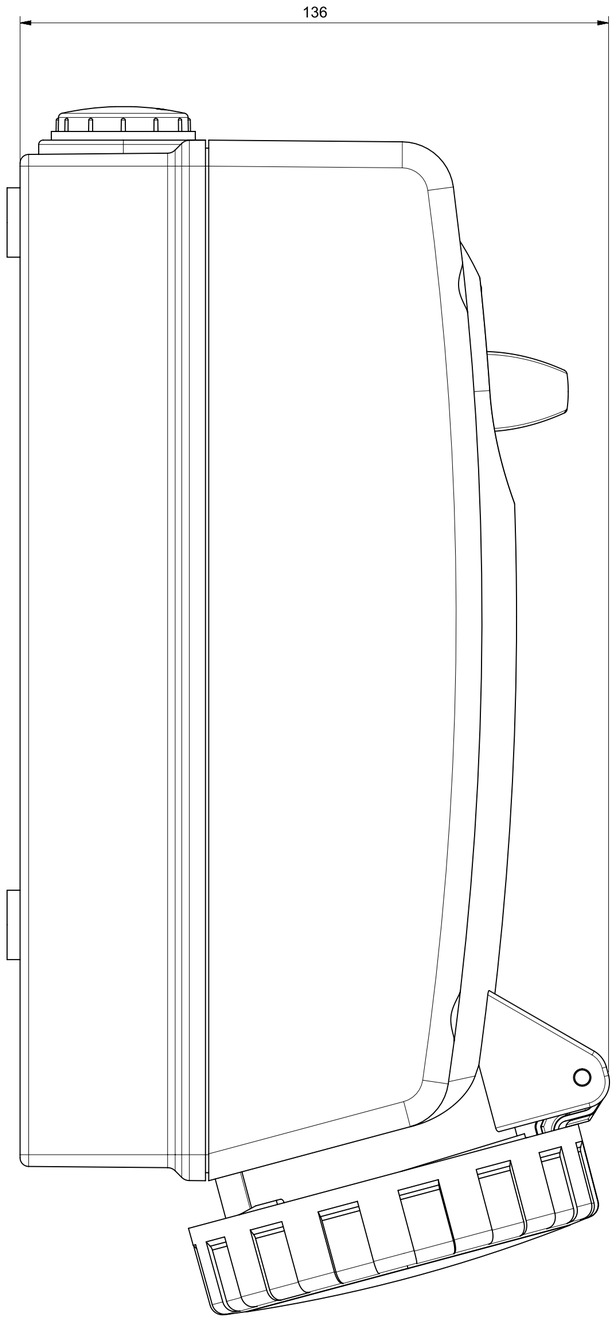

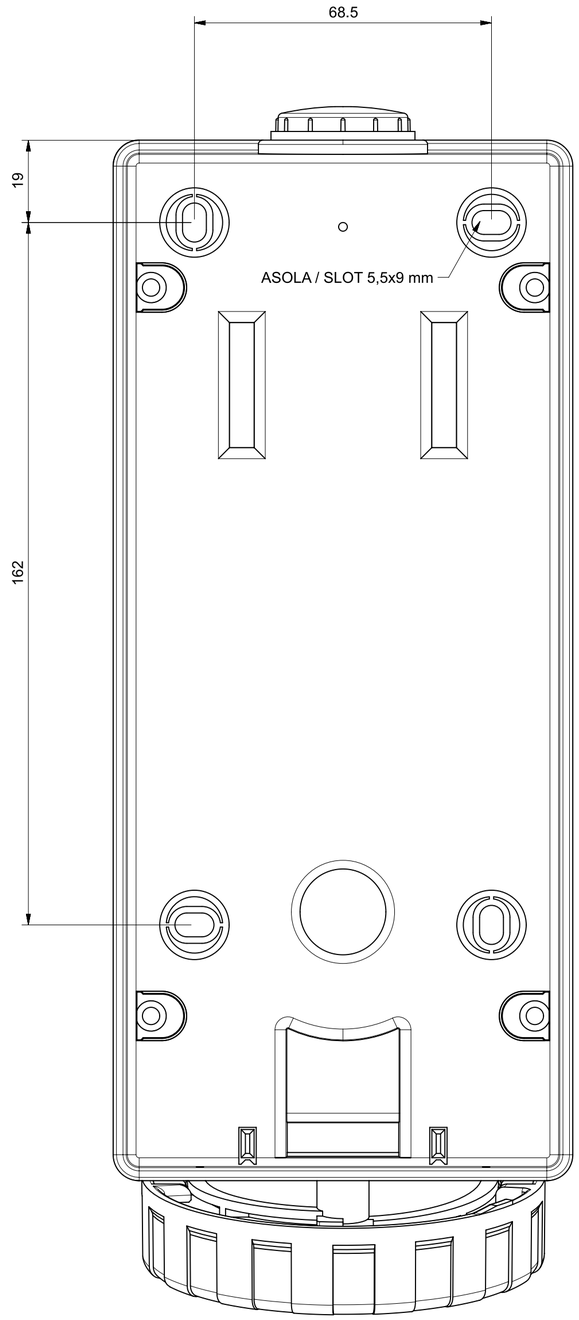

At the end of the law, we reserve the ownership of this design may not be copied and transfer it to third parties or competitors

Format	A2	Scale	1:1	Mould N°		Drawn	SCAME
Tolerances for linear and angular dimensions without indication of specific tolerances: JS13 / UNI 286-1:2010						Date	
						Approved	

SCAME S.p.A. PARRE - (Bergamo)

DESCRIPTION

PRESA ADVANCE 2 3P+T 32A IP67 SENZA FUSIBILI

CODE 4003569

Sheet 1 / 1