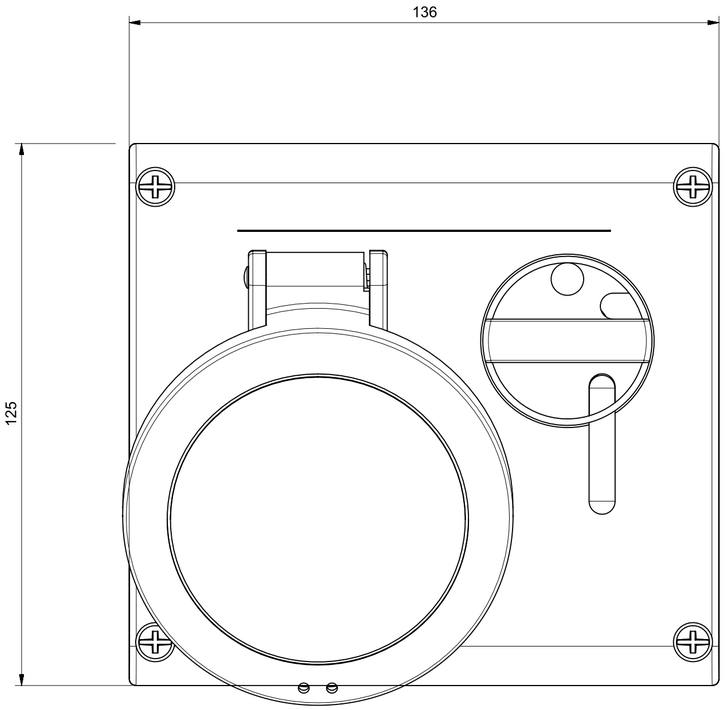

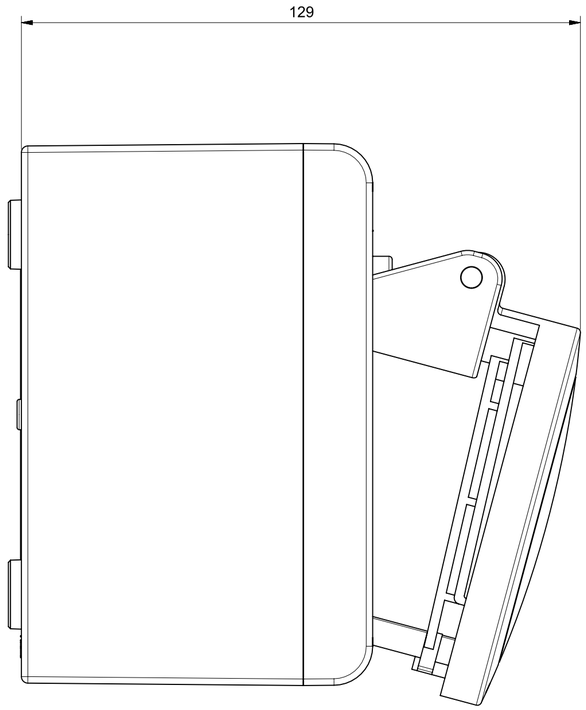

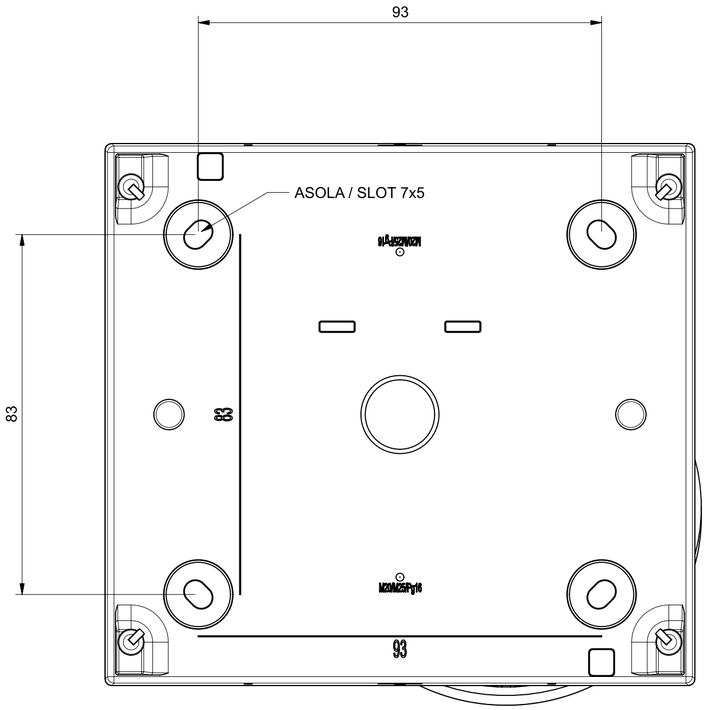

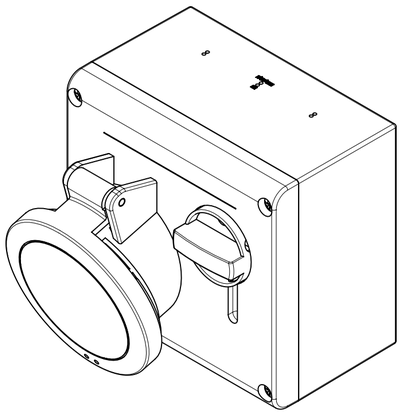

At the end of the law, we reserve the ownership of this design may not be copied and transfer it to third parties or competitors	Format	A2	Scale	1:1	Mould N°	Drawn	SCAME
	Tolerances for linear and angular dimensions without indication of specific tolerances: JS13 / UNI 286-1:2010					Date	
						Approved	
SCAME S.p.A. PARRE - (Bergamo)	DESCRIPTION					CODICE	Sheet 1 / 1
	PRESA PARETE OMNIA 3P+T 32A IP44					4003481	